BottleBag Beach
(English)

Bag colour
- CMYK/FC
- PMS: XXXX

Print colour
- CMYK/FC
- PMS: XXXX

Side label colours:
- PMS: 376
- White

Handles colour
- PMS: 376

Care label
(inside)
2x3,5 cm

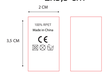

Material Hangtag BottleBag
- Kraft
- Non-kraft

Hangtag BottleBag
Size 5x12 cm

Front

480x325mm

Back

480x325mm

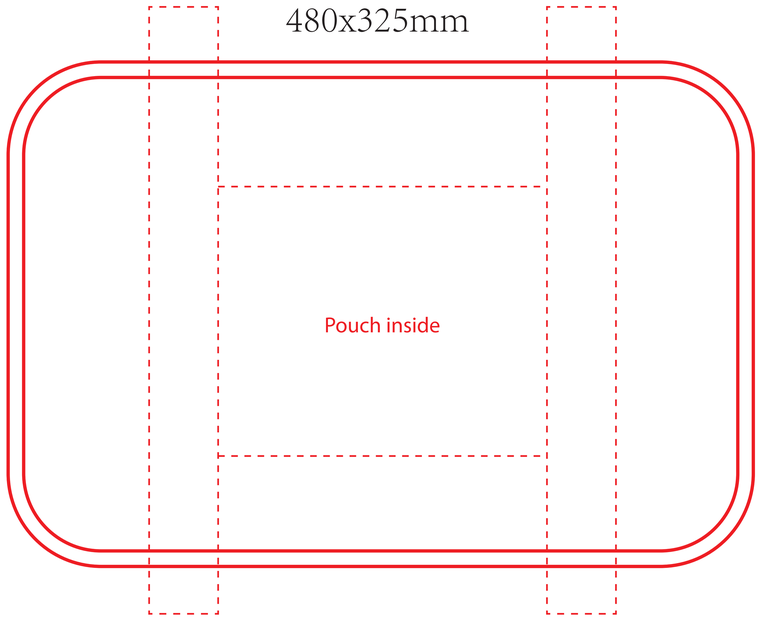

345x240mm

Pouch outside

Zipper

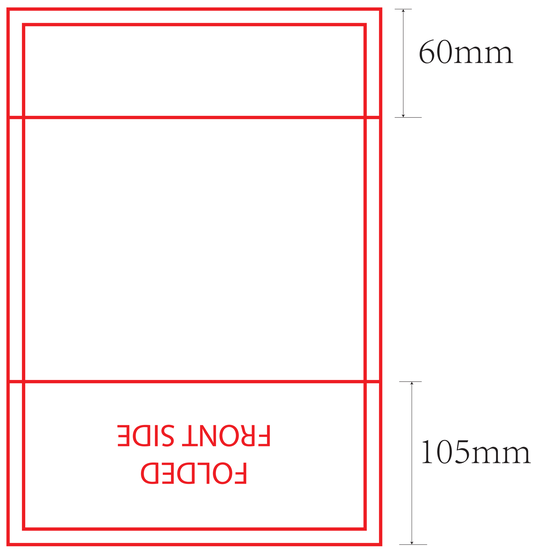

Zipper

Pouch inside

Zipper

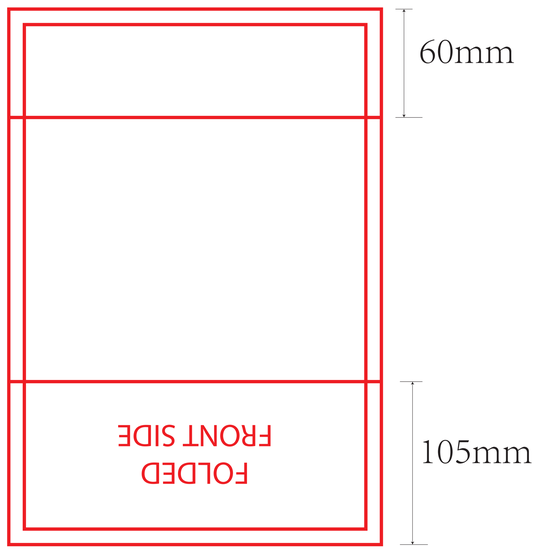

Zipper

700x120mm

Top left

700x120mm

Top right

850x230mm

Bottom bag

BottleBag Beach
(German)

Bag colour
- CMYK/FC
- PMS: XXXX

Print colour
- CMYK/FC
- PMS: XXXX

Side label colours:
- PMS: 376
- White

Handles colour
- PMS: 376

Care label
(inside)
2x3,5 cm

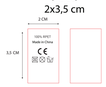

Material Hangtag BottleBag
- Kraft
- Non-kraft

Hangtag BottleBag
Size 5x12 cm

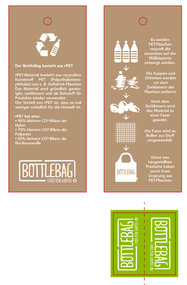

Front

480x325mm

Back

480x325mm

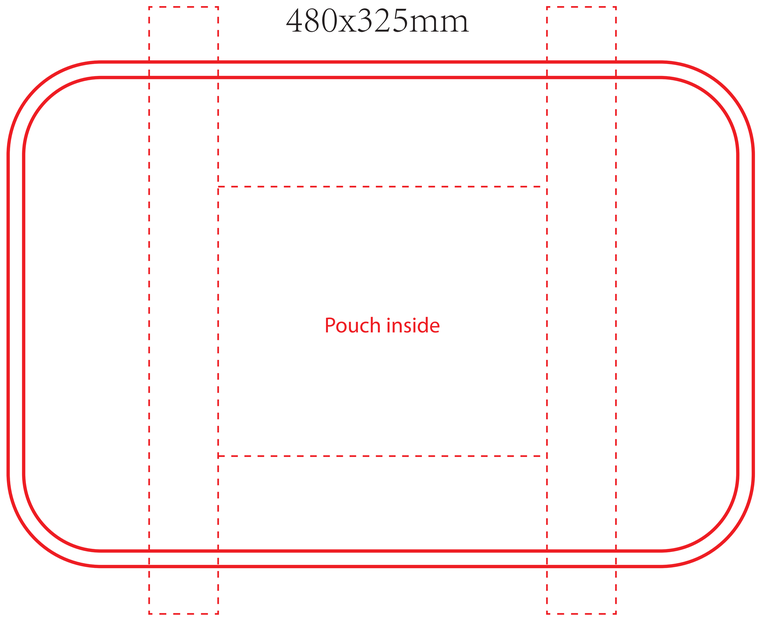

345x240mm

Pouch outside

Zipper

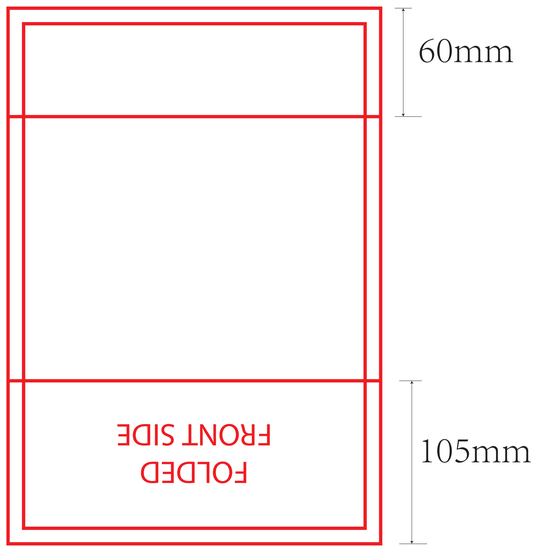

Zipper

Pouch inside

Zipper

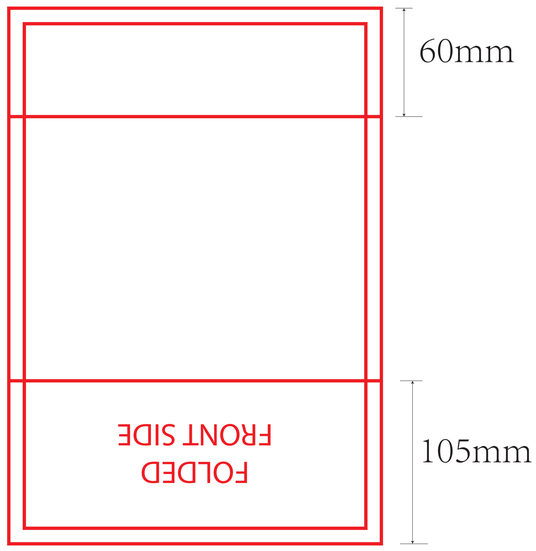

Zipper

700x120mm

Top left

700x120mm

Top right

850x230mm

Bottom bag

BottleBag Beach
(Nederlands)

Bag colour
- CMYK/FC
- PMS: XXXX

Print colour
- CMYK/FC
- PMS: XXXX

Side label colours:
- PMS: 376
- White

Handles colour
- PMS: 376

Care label
(inside)
2x3,5 cm

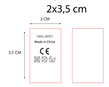

Material Hangtag BottleBag

- Kraft
- Non-kraft

Hangtag BottleBag
Size 5x12 cm

Front

480x325mm

Back

480x325mm

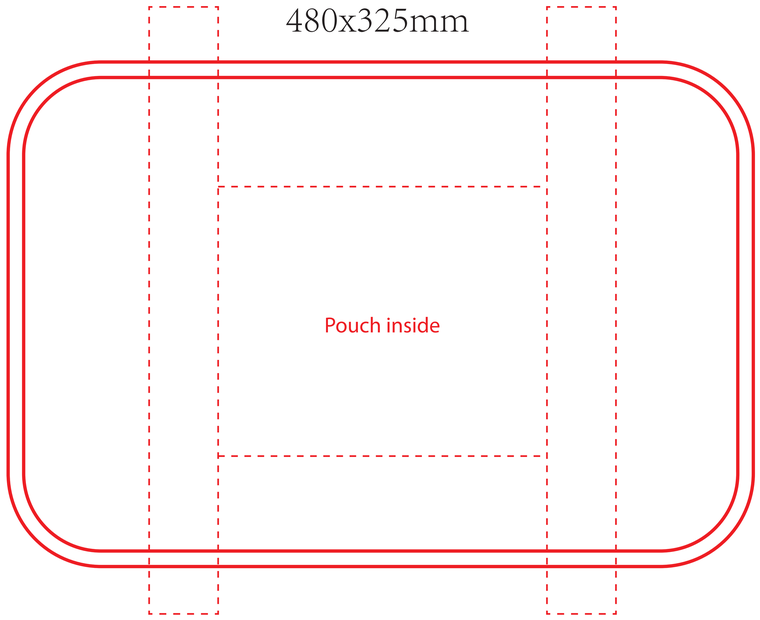

345x240mm

Pouch outside

Zipper

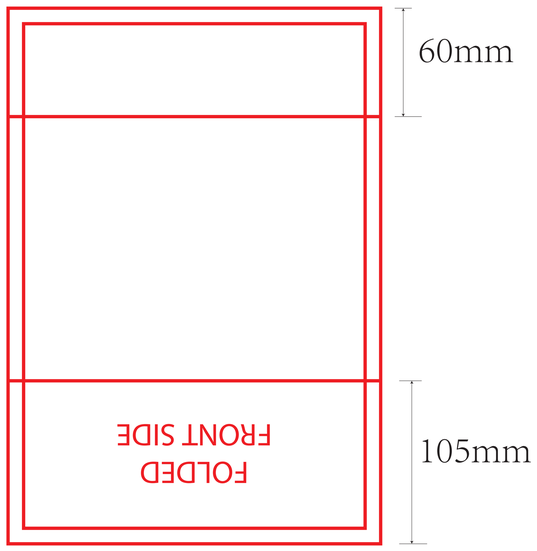

Zipper

Pouch inside

Zipper

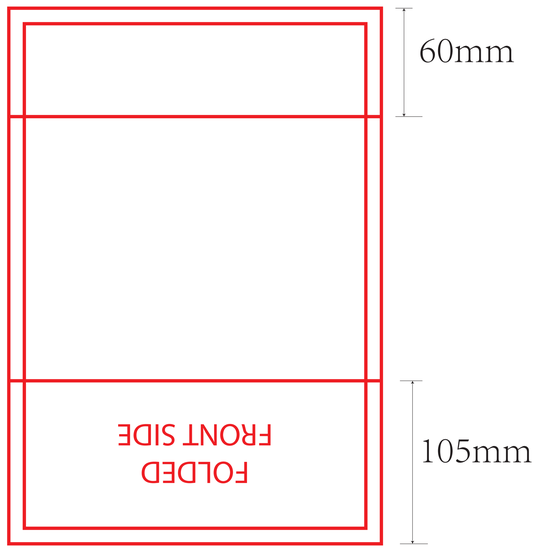

Zipper

700x120mm

Top left

700x120mm

Top right

850x230mm

Bottom bag